PURSUIT OF PERFECTION

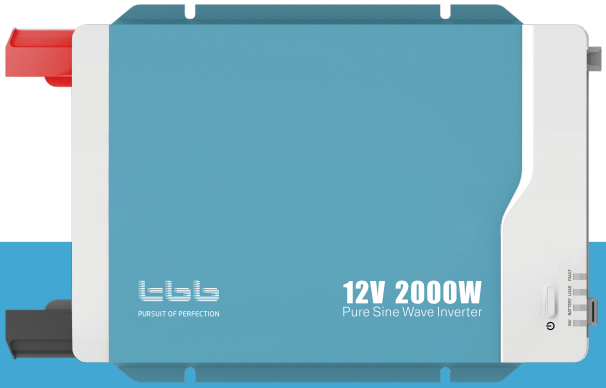

eRay

Pure Sine Wave Inverter Manual

(IH SERIES INVERTER)

A1.1

TBB POWER Co.,Ltd.
www.tbbpower.com

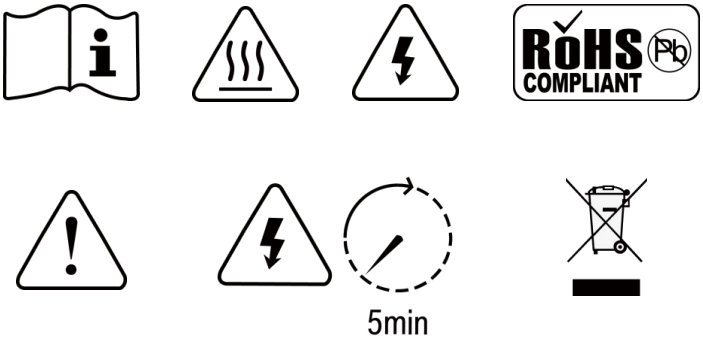

WARNING : FIRE HAZARD

SUITABLE FOR MOUNTING ON CONCRETE OR OTHER

NON- COMBUS TIBLE SURFACE ONLY

CAUTION: THE DC AND AC BREAKER MUST HAVE BEEN

TURNED OFF BEFORE SERVICING

MADE IN CHINA

Disclaimer

Unless specially agreed in writing, TBB POWER Co., Ltd.

- Take no warranty as to the accuracy, sufficiency of suitability of any technical or other information provided in this manual or other documentation.
- Assumes no responsibility or liability for loss or damage, whether direct, indirect, consequential or incidental, which might arise out of the use of such information.
- TBB offer standard warranty with its products, taking no responsibility for direct or indirect loss due to equipment failure.

About TBB

TBB Power is a dedicated designer and manufacturer of sophisticated and environmentally rugged power electronic equipment.

We are offering a wide range of power conversion product from battery charger, standalone inverter, inverter charger combination and solar charge controller.

We ensure consistent product quality by subjecting every product to strictly choice of superior quality components, rigorous testing and burn-in throughout the production process. TBB Power is certified by TUV in accordance with ISO9001 and can be your reliable power solution provider.

About this Manual

This manual describes our product features and provides procedure of installations. This manual is for anyone intending to install our equipment.

Contact Information

TBB Power Co.,Ltd
Web: www.tbbpower.com
Email: service@tbbpower.com

Index

1. General safety instruction

1.1 Safety instruction

As dangerous voltages and high temperature exist within the eRay inverter, only qualified and authorized maintenance personnel are permitted to open and repair it.

This manual contains information concerning the installation and operation of the eRay inverter. All relevant parts of the manual should be read prior to commencing the installation. Please follow the local stipulation meantime.

Any operation against safety requirement or against design, manufacture, safety standard, and are out of the manufacturer warranty.

1.2 General precaution

1.2.1 Do not expose to dust, rain, snow or liquids of any type, it is designed for indoor use. DO NOT block off ventilation, otherwise the INVERTER would be overheating.

1.2.2 To avoid fire and electric shock, make sure all cables selected with right gauge and being connected well. Smaller diameter and broken cable are not allowed to use.

1.2.3 Please do not put any inflammable goods near to inverter.

1.2.4 Never place unit directly above batteries, gases from a battery will corrode and damage inverter/charger.

1.2.5 Do not place battery over the inverter.

1.3 Precaution regarding battery operation

1.3.1 Use plenty of fresh water to clean in case battery acid contacts skin, clothing, or eyes and consult with doctor as soon as possible.

1.3.2 The battery may generate flammable gas during charging. NEVER smoke or allow a spark or flame in vicinity of a battery.

1.3.3 Do not put the metal tool on the battery, spark and short circuit might lead to explosion.

1.3.4 Remove all personal metal items such as rings, bracelets, necklaces, and watches while working with batteries. Batteries can cause short-circuit current high enough to make metal melt, and could cause severe burns.

2.Introduction

eRay inverter could supply a steady pure sine wave AC to various load on board, such as coffee machine, microwave, hairdryer or sensitive electronics. It could bring home comfort and convenience for your life or work on board, either motor home or utility vehicle.

- Pure sine wave output with full power at 40°C
- High frequency design featuring compact and light weight
- High efficiency up to 90%
- Low status consumption power
- Power save mode through dip switch
- Thermal control fan
- With built in USB charger, 5V 2A
- Output voltage and frequency settable by dip switch
- Complete protection with reverse polarity protection
  - DC input under/over voltage protection
  - Over temperature protection
  - Over load and short circuit protection
  - DC input reverse polarity protection by fuse
- Optional remote control available
- RS485 communication

3. Structure

3.1 Product drawing

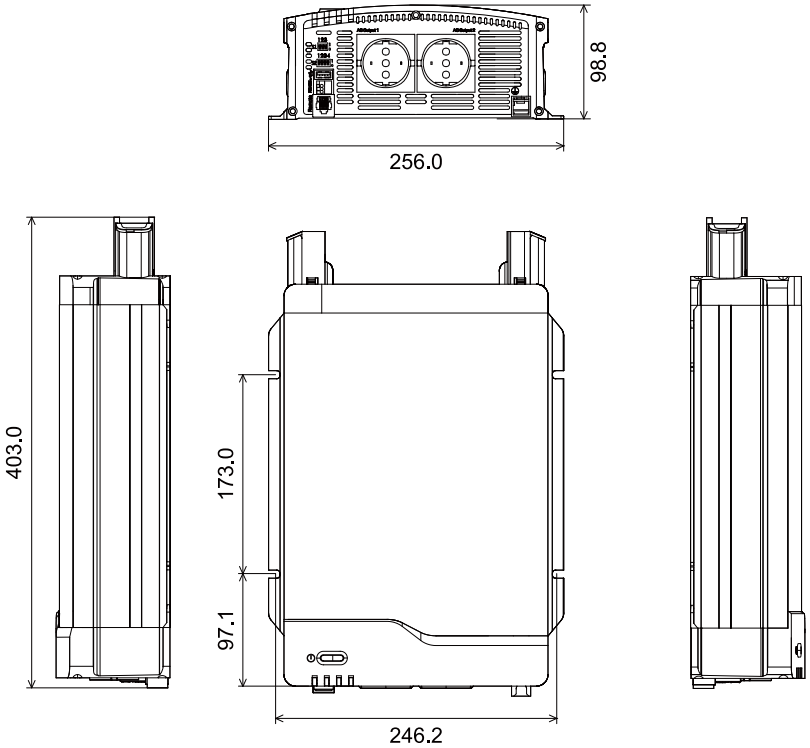

3.2 Control panel

- **Rear panel**

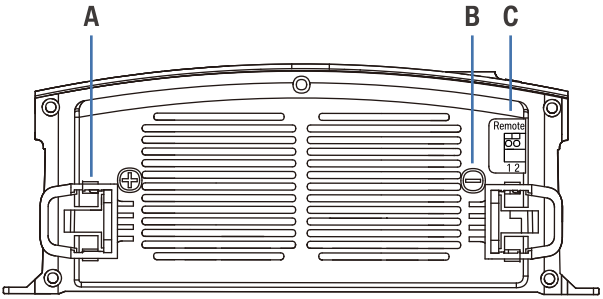

- **Front panel**

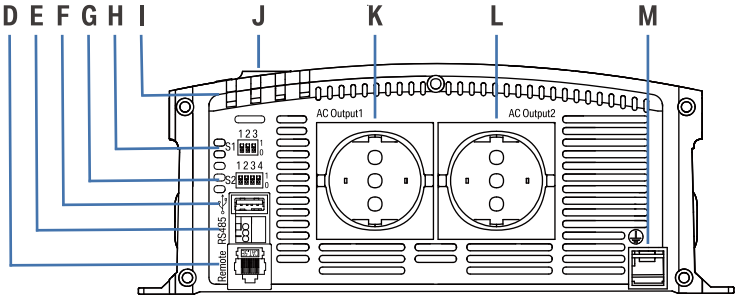

A	+	DC input +	H	S1	Dip switch for voltage and frequency setting
B	–	DC input –			
C	Remote	Dry contact input	I	LED	LED indicator
D	Remote	Reserved for remote control	J	⏻	ON/OFF
			K	AC Output 1	AC output socket
E	RS485	RS485 port	L	AC Output 2	AC output socket
F		USB charger	M	⏚	GND
G	S2	Dip switch for power saving mode			

3.3 Available sockets type

Socket type	Picture
European type	
Australian type	
UK type	

4. Configuration

Please do the correct configuration for voltage and frequency by dip switch before installing the inverter.The default factory setting is 230VAC 50Hz.

Also the user can set the power saving mode by dip switch.The default factory setting of power saving is OFF.

4.1 Set the AC output voltage and frequency

Please refer the below table for the dip switch setting.

Frequency		Output voltage		
S1-1=0	50Hz	S1-2=0	S1-3=0	220VAC
S1-1=1	60Hz	S1-2=1	S1-3=0	230VAC
Kindly be noticed that the frequency setting only is affective after rebooting.		S1-2=0	S1-3=1	240VAC
		S1-2=1	S1-3=1	250VAC

4.2 Power saving setting

Power saving mode is enable by S2-1 Dip switch on the front panel. Please refer the below table.

Dip switch status	Function
S2-1=0	Disable the power saving mode
S2-1=1	Enable the power saving mode

Power saving threshold setting value is adjustable by Dip switch S2-2/3/4. Please refer the below table.

- When the load is less than the power-saving threshold setting value, the inverter automatically enters the power saving mode to reduce the static power consumption, thereby saving battery power.
- When the inverter is in power saving, the “inverter” indicator is flashing.
- During the period when the inverter is in power saving status, there is a discontinuous output every 6secs to detect the load status. Please adjust the threshold value if the loads are powered on shortly by the output.
- There is a small gap between the threshold of entering and exiting the power saving mode. That is to avoid the frequent switch when the load power is close to the threshold value because of the detecting deviation.

Dip switch status			Enter threshold	Exit threshold
S2-2	S2-3	S2-4		
0	0	0	20W	25W
1	0	0	30W	35W
0	1	0	40W	45W
1	1	0	50W	55W
0	0	1	60W	65W
1	0	1	70W	75W
0	1	1	80W	85W
1	1	1	90W	95W

5. Installation

5.1 Material list

The unit is packed with following materials. Please confirm the series number on inverter is same to that on outer carton.

- eRay pure sine wave inverter
- User's manual
- DC terminal plasticcover (Black*1 and Red*1)

5.2 Location

Please install the equipment in a location of Dry, Clean, Cool with good ventilation.

- Working temperature:-20~40°C
- Storage temperature:-30-70°C
- Relative Humidity:10%-95%, non-condensing
- Cooling:Forced air

5.3 Wiring + Fuse recommendation

Please find the following minimum wire size. In case of DC cable longer than 3m, please increase the cross section of cable to reduce the loss.

We recommend connecting a DC fuse corresponding to the conductor between battery and inverter, which will offer protection to the battery cable.

Model	DC Cable size	Fuse
IH1500L	50mm^2	200A
IH2000L	50mm^2	250A

5.4 Installation and connection

For the user operation safety, cut off the power before installation

5.4.1 Fix the equipment

- Basically, eRay inverter could be installed either vertically on wall or horizontally on floor.
- Please choose a flat surface and with M6 to fix the unit securely
- In mobile application, please keep the vibration as small as possible

Mount the inverter such that the fan axis is horizontal.

5.4.2 Connecting the cable

Please make sure the inverter is turned off before connection. Otherwise, high voltage could be present.

Please double check battery voltage match the model you are going to install, the wrong battery could destroy equipment and is out of warranty.

Please double confirm the polarity of DC input. Reverse polarity could cause permanent damage on equipment and it is out of warranty.

Please ensure that the protective grounding of the chassis is connected to the ground or the chassis of the vehicle when using this machine on the application platform of vehicles and ships.

- **Connecting to earth**

At the bottom of the enclosure, there is a ground terminal. Please connect it with EARTH or vehicle chassis via an 8# AWG wire.

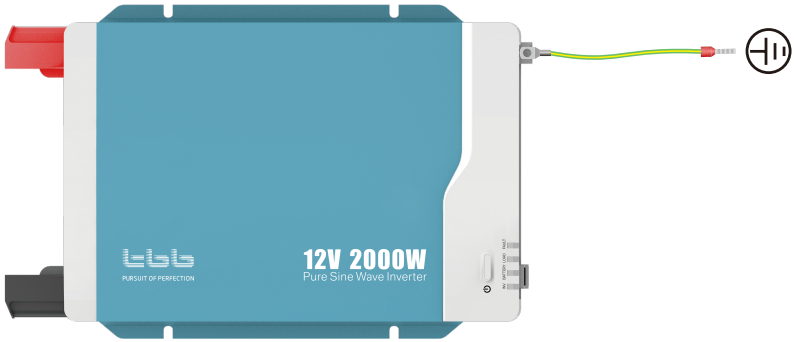

- **Connecting to battery**

The installation of a fuse must be on a positive cable. Failure to place a fuse on positive cable between the inverter and battery may cause damage to the inverter and will void warranty.

Ensure all the battery cables are tight (torque to 12Nm). Loose connections may cause overheat and fire.

- Choose the right cable size (refer to 5.3 for details) and follow polarity guide marked on the panel.
- Pull the positive DC cable through the red plastic cover and negative DC cable through the black plastic cover.
- Insert the cables to the DC input terminals on the rear panel of the inverter. The red terminal is represents positive (+) and black terminal represents negative (-).
- Secure the DC cable on DC input + and DC input - terminals respectively making sure it is tightly screwed.
- Cover the red and black plastic caps on DC + and DC - terminals respectively.

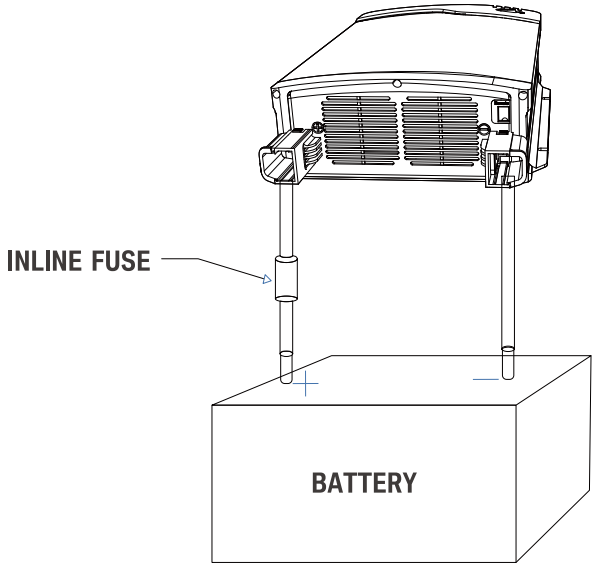

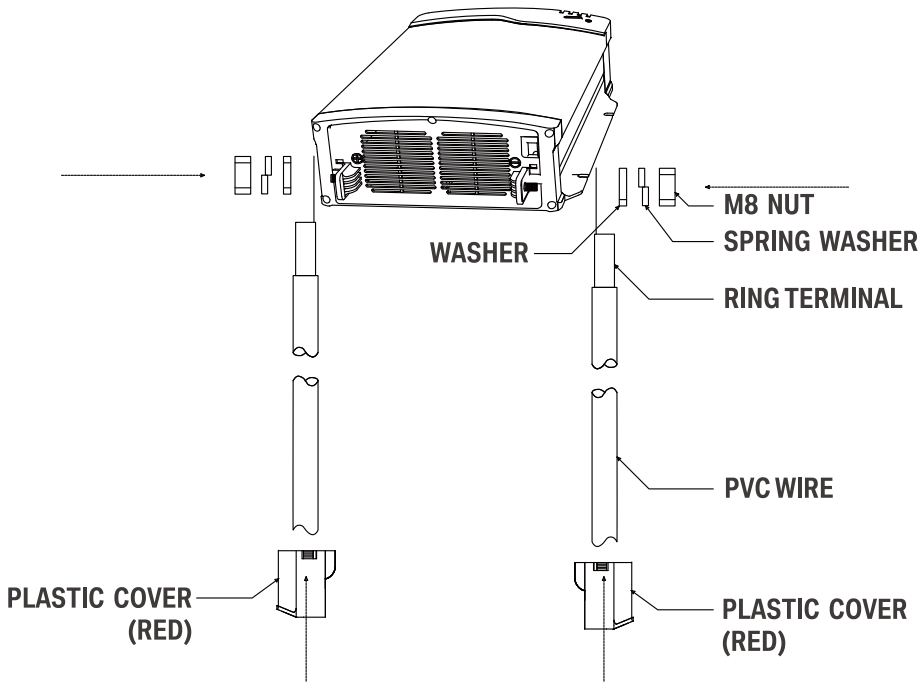
M8 NUT
SPRING WASHER
WASHER
RING TERMINAL
PVC WIRE
PLASTIC COVER
(RED)
PLASTIC COVER
(RED)

- **Connecting dry contact input**

- You can use dry contact supplied to switch on/off the inverter through ignition.
- At anytime, please use only one of them to control the inverter on/off, either main switch or dry contact.
- Please find the following two recommended wiring for dry contact input

Item	Description
Remote –pin 1	Enable +
Remote –pin 2	BAT+

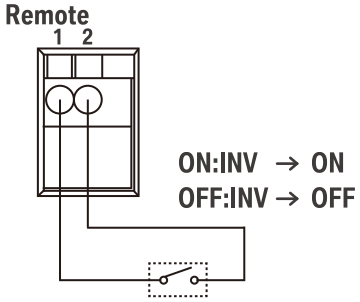

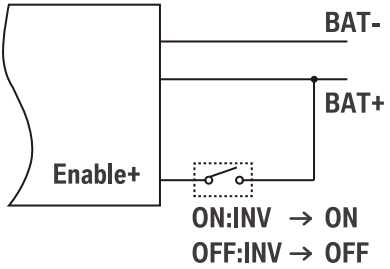

- **Connecting RS485**

Serial port monitoring and control through computer interface.

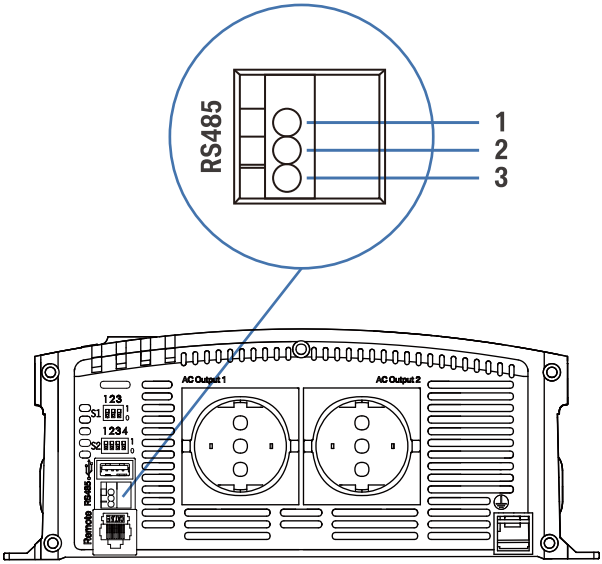

Port	Definition
1	RS485 B-
2	GND
3	RS485 A+

6.Operation

6.1 Double checking

- Check the DC input voltage of this inverter is same to your battery nominal voltage. NEVER try to connect different DC input to inverter.
- Inspect the right polarity of DC on service battery; otherwise the unit cannot be powered ON.
- Please check if you connect the Negative terminal of starter battery to the DC – terminal of inverter.
- Inspect AC output is correct; make sure unit is no short circuit.

6.2 Inverter operation

Press shortly the ON/OFF switch on the front panel to turn the inverter power on.After that the “INV” and “BATTERY” LED indicators are illuminated, and then the inverter is ready to deliver AC power to the loads.

The ON/OFF switch, dry contact input and optional remote control works independently. It means if you one group switch to power on the inverter, you can only use the same group to power off.

6.3 LED indicator status

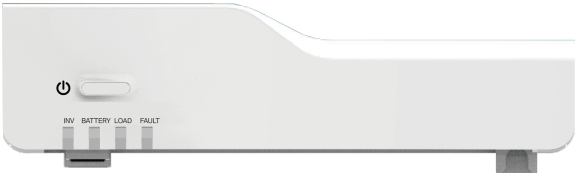

LED indicator	Description
INV	Indicates status of inverter
BATTERY	Indicates battery level
LOAD	Indicates load level
FAULT	Indicates alarm and fault status

LED name	LED color	LED status	Indication	Beep
INV	N/A	Extinguish	Inverter is off	/
	Green	ON	Normal	/
	Green	Flashing	Power saving mode	/
Battery	Red	ON	<11.0V	Intermittent beep, once every sec
	Orange	ON	11.0~11.5V	/
	Green	ON	11.5~15.0V	/
	Orange	ON	15.0~15.5V	/
	Red	ON	>15.5V	Intermittent beep, once every sec
Load	N/A	Extinguish	<20%	/
	Green	ON	20%~50%	/
	Orange	ON	50%~90%	/
	Red	ON	>90%	Intermittent beep, once every sec

7. Trouble shooting

Problem	(Possible) Cause	Solution
A buzzer sounds	The input voltage is becoming too high or too low	Check the input voltage. Make sure that this value falls between specifications of the inverter. The inverter will re-start automatically when the input voltage is qualified again.
	Overload protection	Reduce the load power
Redindicator 'fault' lights	Battery voltage too low or too high. The output is shut down.	Check the input voltage. Make sure that this value falls between specifications of the inverter. The inverter will re-start automatically when the input voltage is qualified again.
	Temperature protection	Check if the fan is working and that the inverter has sufficient ventilation possibilities
		Inverter is located in a location with a high ambient temperature. Place the inverter in a cooler environment
		Reduce the load
Red indicator 'fault' blinks slowly	Output issue	There is a short-circuit or overload. Check the total load power and the connections. When the problem has been resolved, the inverter will restart automatically
'INV' led ON, but the connected equipment does not work	Battery capacity too low to supply the requested power	Connect a higher capacity battery (set)
	Weak connection between battery and inverter	Check all connections and cables
	The cables used are too thin	Mount cables matching the length and capacity
	The requested power is more than the inverter can deliver	Check the consumption of the connected equipment. Make sure that this falls within the specifications of the inverter

Problem	(Possible) Cause	Solution
Inverter does not function at all. All LEDs are off	No input voltage present	Check the connections between battery and inverter
	External fuses in battery cable defective	Replace the fuses (only equivalent values)
	Input voltage below the minimal value	Battery voltage too low or battery defective
	Input voltage higher than the maximum value	Check if the system-voltage matches with the inverter
		Check the system on DC power supplies that give a too high voltage
	Internal defect	When after checking the total system the inverter still doesn't work, it can be send back for repair
Connected equipment gives disturbance.	'Ground' not connected	Connect the 'ground' connection of the inverter to the chassis of the vehicle or the minus
	Cabling is against the housing of the inverter	Make sure that the cables do not touch the housing of the inverter.

8. Specification

Model No.	IH1500L	IH2000L
DC input		
Nominal voltage	12VDC	
Voltage range	10.5~16VDC	
Input under-voltage alarm	10.5±0.5VDC	
Input under-voltage protection	10.0±0.5VDC	
Input under-voltage recovery	12.6±0.3VDC	
Input over-voltage protection	16.5±0.5VDC	
No load current @12VDC	≤ 1.1A	≤ 1.5A
Power saving mode @12VDC	≤ 0.3A	≤ 0.3A
Current when power off	≤ 3mA	≤ 3mA
AC output		
Continuous output power @40°C	1500W	2000W
Maximum output power	1600W±4%	2150W±2%
Output voltage	230Vac± 5%, 220/230/240 DIP swtich Settable	
Output frequency	50/60±0.5Hz DIP swtich Settable	
Output waveform	Pure sine wave	
Total harmonic distortion	< 3%	
Short circuit protection	<5s, auto-restart	
Efficiency (Max.)	90%	
DC output		
Output voltage	5 ± 0.25VDC	
Maximum output current	2A	
Protection		
Input protection	Over /under voltage protection, Reverse polarity (interner fuse)	
AC output protection	Over load,Short circuit	
Others	Over temperature	

Model No.	IH1500L	IH2000L
Other Data		
Recommended battery cable	#1/0 (50mm^2)	
AC output connector	Sockets	
DC output connector	USB socket*1	
Communication	RS485	
Enclosure	Aluminum	
Dimension (mm) (Max.)	403*256*99	
Net weight (KGS)	4.6	4.8
Cooling	Temperature and load controlled Fan	
Noise	<55dB	
Protection	IP20	
Safety & EMC		
Safety	EN60950-1	
EMC	EN61000-6-3, EN61000-6-1, EN61000-3-2, EN61000-3-3	
E-mark	CISPR25; ISO7637-2	
Environment		
Operating ambient temperature	-20 to 40°C	
Storage temperature range	-30 to 70°C	
Storage humidity	10~95% RH	

TBB POWER Co.,Ltd.

Web : www.tbbpower.com
Tel : +86-592-5212299
Fax : +86-592-5796070
Email : service@tbbpower.com